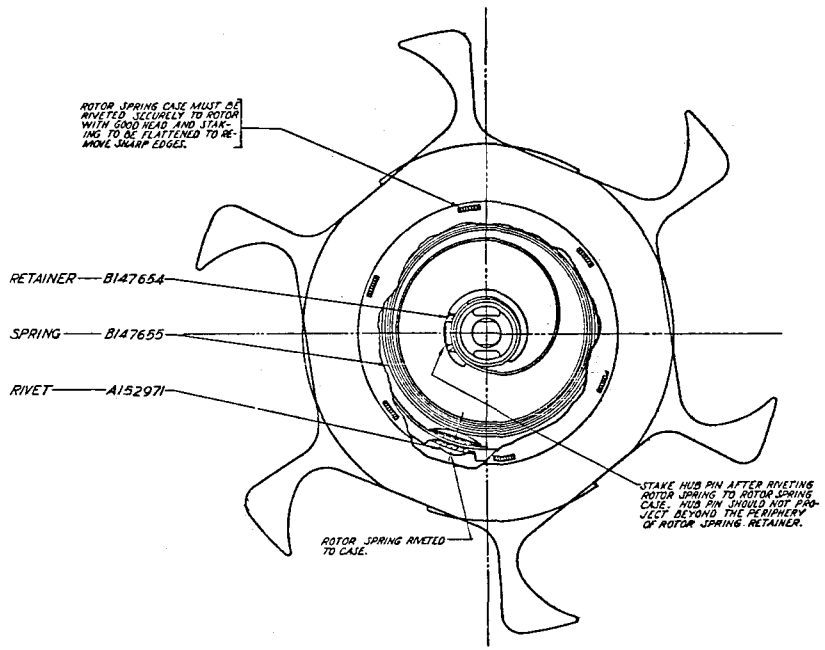

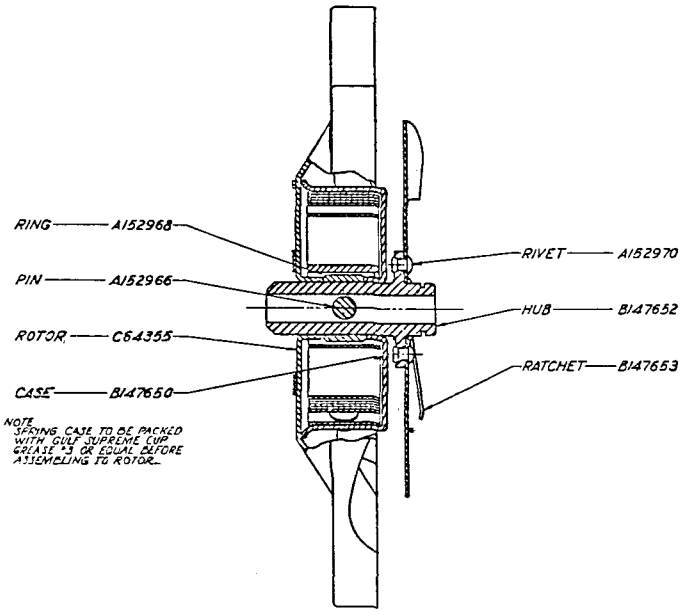

NOTE
SPRING CASE TO BE PACKED WITH GULF SUPREME CUP GREASE #3 OR EQUAL BEFORE ASSEMBLING TO ROTOR.

PHYSICAL PROPERTIES	
Y.P.	
T.S.	
EL-2	
RED.	
HT. T.	
BR.	
SCL.	
C.C.	

D6535504

LIST OF COMPONENTS

1	2	3		4
LINE NUMBER	DRAWING NUMBER OR PIECE MARK	NAME OF COMPONENT		NO. REQUIRED PER UNIT ASS.
1	D35504	ROTOR, ASSEMBLY		1
2		COMPOSED OF:-		
3	B147650	1-CASE, ROTOR SPRING	*	
4	A152966	1-PIN, HUB	*	
5	C64363	1-RATCHET, ASSEMBLY	*	
6	B147654	1-RETAINER, ROTOR SPRING	*	
7	A152968	1-RING, HUB	*	
8	A152971	1-RIVET, ROTOR SPRING	*	
9	C64355	1-ROTOR	*	
10	B147655	1-SPRING, ROTOR	*	
11				
12				

* WILL NOT BE ISSUED FOR FIELD MAINTENANCE EXCEPT AS COMPONENTS OF AUTHORIZED ASSEMBLIES.

ROTOR, ASSEMBLY 6535504 ~~D35504~~

REF: UNITED AIR CLEANER CO. DRG 50032

OCTOBER 20, 1941	CLASS	DIVISION	DRAWING	FILE
REVISIONS				
1 (Revised 12-30-44)	SYMBOL			

DRAFTSMAN	TRACER	L'D'G. DRAFTSMAN
CHECKER		CHIEF DRAFTSMAN

SUBMITTED:-
LT. COL. ORD. DEPT. U.S.A.
EXAMINED:-
ORD. DEPT. U.S.A.
APPROVED BY ORDER OF THE CHIEF OF ORDNANCE:-
COL. ORD. DEPT. U.S.A.
ORDNANCE OFFICE, WAR DEPT.

DRG. PERTAINS TO
D35508 MAGAZINE, DRUM, .50 CARTRIDGE

D6535504 ~~D35504~~

SUPERSEDES D35504

0 1 2 3 4 5 INCHES